Industrial Direct Drive

1_13

Powerful ▪ Small Footprint ▪ Made in the USA

20 hp Direct Drive Dust Collector Quote Sheet

Oneida Air Systems, Inc. was founded in 1993 to bring cost effective, state-of-the-art dust collection systems and material handling ductwork to woodworking shops. OAS designs and manufactures industrial grade dust collection systems that create a practical, safe and healthy work place environment.

The Oneida Advantage

Made in the USA!

Our entire system is ETL safety certified.

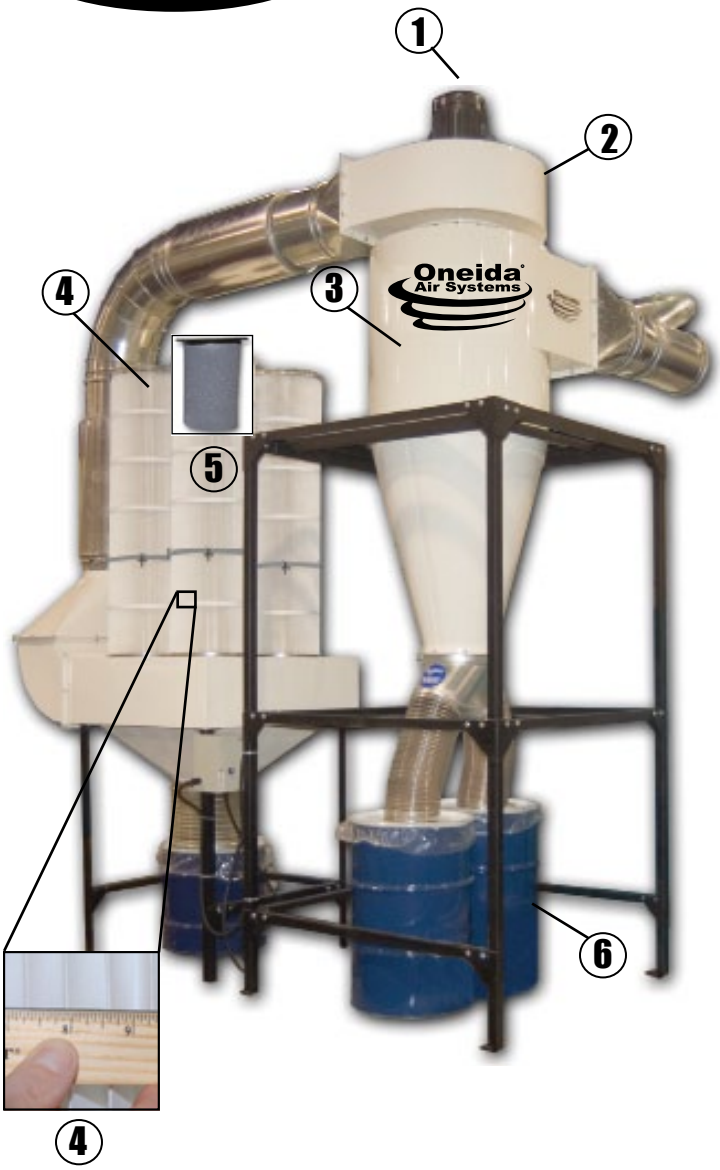

1 *Motor*

U.S Made Baldor Motor 20 hp, Class F TEFC Motor with a 1.15 Service Factor

Magnetic Starter with on/off switch and amperage overload protector.

2 *Fan Wheel / Fan Housing*

Backward Incline design. Designed for high performance low noise.
Dynamic two-plane balanced to ISO 6.3 Specifications. (Same as aircraft turbines.)

Fully Welded Fan Housing
11 ga. Motor Housing Plate

3 *Cyclone Construction*

Cyclone Technology elliminates filter maintenance.
16” solid welded inlet with neutral vane.
12 Gauge cyclone barrel with solid welded construction.
Powder coated paint finish over heavy gauge steel.

Outlet can be rotated independent of inlet - 8 bolt patterns

4 *Filter - FCS186200*

(4) 155 Sq. Ft Filters - 620 Sq. Ft. filter area.
Accredited independent lab testing verifies filter media filtration of 99.9% of test material from 0.2-2.0 microns @ 11 FPM.
Filters have wide pleat spacing and teflon like interior coating for easy dust release.

HEPA Filter Media Option Available

Hepa Filter Media Available
GE HEPA (H-12) Filter Media
- see spec sheet on website

5 *Internal Silencer*

Built in Silencer reduces sound to 82 dBA @ 10’. Patented design.

6 *Dust Drums - OEK550901*

(2) 55 gallon steel drum. Larger dust bins available.

Bag Gripper available. Line dust drum with an easy to empty plastic bag.

7 *2 Year Warranty*

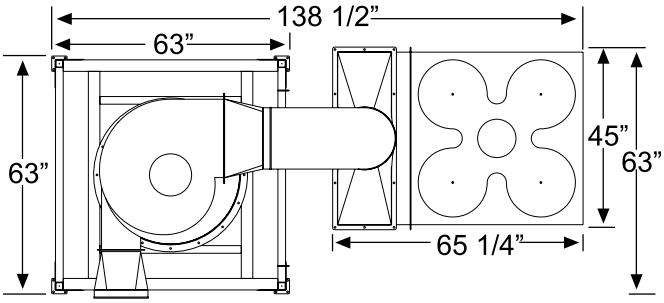

System Performance

- 3800 CFM @ 12” SP

System Dimensions

- Height w/ 55 Gallon Drum: (20hp) 179”
- Footprint w/ Ext. Cartridge: 63” x Approx. 138 1/2”
- Rectangular Inlet (20hp) 16” dia.
- Full Welded Inlet w/ Neutral Vane
- Outlet: Rectangle (Square to Round Adapter Available)
- Powder Coated Paint Finish Over Heavy Gauge Steel
- Weather-Proof Cyclone and Fan Blower
- Fully Seam-Welded Construction

Integral Fan Blower

Industrial Quality Motor

- U.S. Made Baldor
- 20 Horsepower Three Phase
- TEFC Motor, 1.15 Service Factor
- Insulation Class F
- Voltage: 208-230 / 460V
- Amperage: 50.1 - 46 / 23A
- Welded carbon steel / Backward Inclined / Dynamic, Two-Plane Balanced to ISO 6.3 Specifications. The Same as Aircraft Turbine Rotors.

BALDOR MOTORS • DRIVES • GENERATORS

Filter Media

ASHRAE Tested

- 620 Sq. Ft. (4) High Efficiency Axtar Spun-Bonded Media
- Accredited, Independent Lab Tested
- Teflon-Like Coating to Facilitate Dust Cake Release
- Filter Media Captures 99.9% of Test Material from 0.2 - 2 Microns @ 11 FPM

Sound Level

- With Standard Silencer & Filter: 82 dBA @ 10’

Dust Bin

- (2) 55 Gallon Steel Drum. Other Sizes & Types Available.

Included

- Heavy Duty One Angle Iron Stand
- Filter Efficiency Kit
- Magnetic Starter
- Square to Round Inlet Adapter to 16” Dia.

Options

See Accessories page for pricing.

- Hoppers
- Bag Gripper, Plastic Bag Hold-Down System
- Bin Level Indicator
- Airlock
- GE HEPA (H-12) Filter Media

*Oneida reserves the right to change or modify specs and system appearance without notice. Actual system appearance may vary.

System Curve

System Performance - 15 and 20hp Direct Drive

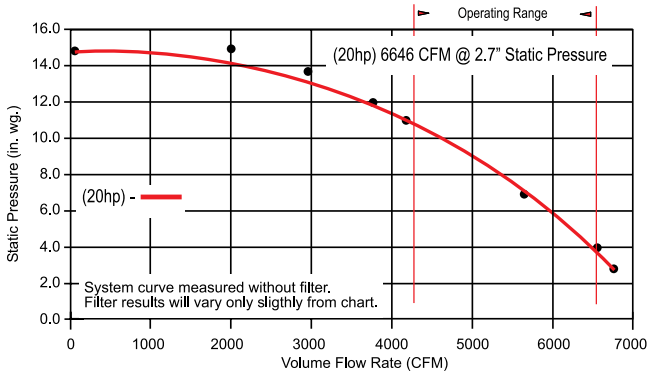

Oneida 20hp Direct Drive

Part #	Description	Price
XXK200300	20hp Direct Drive Dust Collector	$11,145.00*
FXK042001	Plenum Kit	$4,850.00

Base Price. Does Not Include Filters.

**This proposal may be withdrawn by Oneida Air Systems if not accepted within 30 days.*

Let OAS help you design your dust collection system

Ductwork Design

With a system purchase and the placement of a refundable shop plan design fee, engineers and qualified technicians will size and design a custom dust collection system complete with ductwork layout including the proper pipe dimensions to run to each piece of equipment.
Trained sales technicians are available to answer questions: 1.800.732.4065

Ductwork Estimate:

Snaplock pipe & Components (24 - 26 gauge) is available with this system and costs approximately $225 - $250.00 per woodworking tool port. Average cost estimate for ductwork:

(# of Machines) x $225 - $250.00 = Ductwork Estimate 24 - 26 Ga. ductwork

Spiral pipe (24 Ga.) and heavy elbows are available with this system and costs approximately $325 - $350.00 per woodworking tool port. Average cost estimate for ductwork:

(# of Machines) x $325 - $350.00 = Ductwork Estimate 24 Ga. spiral pipe & heavy gauge elbows

Shipping:

Snaplock shipping is free on $300+ ductwork order / 48 states / Some restrictions apply.

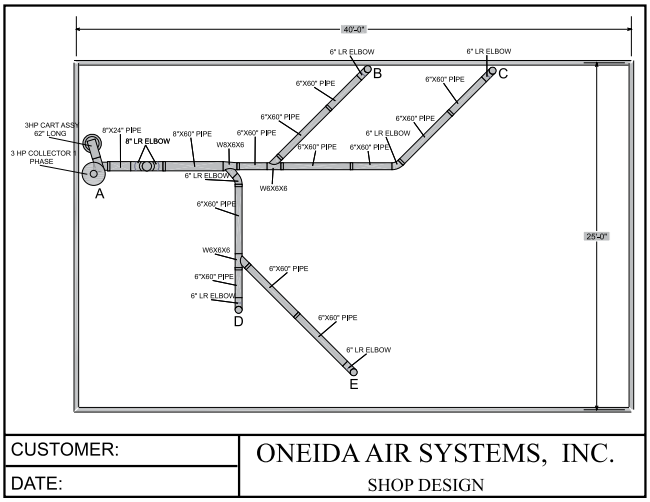

CUSTOMER:	ONEIDA AIR SYSTEMS, INC.
DATE:	SHOP DESIGN

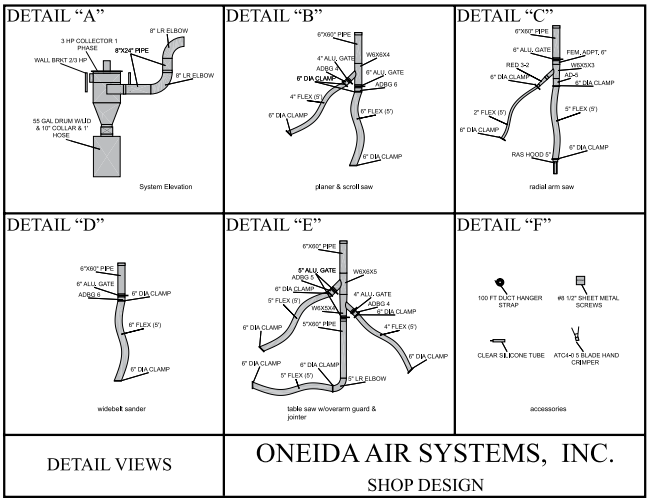

DETAIL VIEWS	ONEIDA AIR SYSTEMS, INC.
	SHOP DESIGN

Ready-to-Ship Ductwork

"Service was always great. One of the main reasons I chose Oneida was for the design service and it was all that I hoped for. I felt that the system recommended to me was exactly what my shop needed."

- R.W.

Accessories

Hoppers

Part #	Description	Price
SHZ050000	.5 Cu. Yd. Hopper	Call for Pricing
SHZ010000	1 Cu. Yd. Hopper	
SHZ150000	1.5 Cu. Yd. Hopper	
SHZ020000	2 Cu. Yd. Hopper	
SHZ030000	3 Cu. Yd. Hopper	

Airlocks maintain a continuous vacuum at the bottom of the cyclone, eliminating the need for an air tight seal between the cyclone and the dust bin. The wood waste continuously drops straight down.

Airlocks

Part #	Description	Price
SAZ080000	1/2hp Rotary Airlock 8”	Call for Pricing
SAZ100000	2hp Rotary Airlock 10”	

*1/2hp requires Adapter #DRX100800 - $147.00

Pat. # 8,514,090

The Oneida Dust Sentry™ with adjustable IST (Infrared Sensing Technology), flashes a strobe light to alert you when the dust in your container reaches your preset level, telling you when it’s time to empty the container.

Dust Sentry™

Part #	Description	Price
AXB999110A	Dust Sentry Sensing Unit	$148.00

Enables you to line your dust drum with a plastic bag for easy, safe dust disposal.

Drum Liner - Plastic Bag Hold-Down

Part #	Description	Price
ABX000035	35 Gal. Hold-Down	$48.00
ABX000055	55 Gal. Hold-Down	$58.00

Replacement Filters

Part #	Description	Price
FCS182000	18”x 19.5” Spun-Bond Filter	Call for Pricing
FCS186200	18” x 62” Spun-Bond Filter	
FCS186200H	18” x 62” HEPA Media Filter	

HEPA

Spun-Bond filters 99.9% of test material from 0.2 - 2 microns.
GE Certified (H-12) HEPA Media / MERV 16+ rated

The Universal Drum Dolly works with all of Oneida’s drums. This includes 5 / 10 / 17 / 35 / 55 gallon drums.

Universal Drum Dolly

Part #	Description	Price
SDD990000	Universal Drum Dolly	$89.00

Oneida Air Systems™ Rotary Air Lock - SAZ080000A

This compact, rotary air lock was designed with smaller systems in mind. It will allow for any size dust container reducing shut down time to empty dust bins, limit dust exposure and material back up in the dust collection system. It is economical to run and uses far less energy than standard air locks.

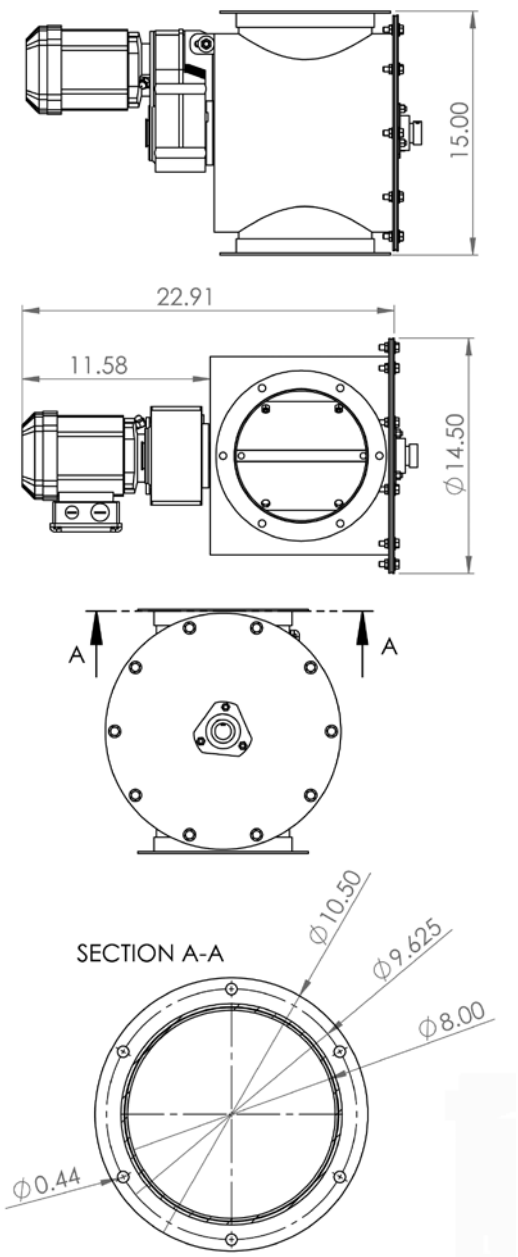

Made in USA

Features:

- Fully seam-welded cold rolled steel.
- Durable, powder-coated finish.
- Easily replacable seals.
- 1/4hp, 230 v, 3 phase, helical drive is compact, durable and quiet. Made in USA.
- 13 rpm rotation for less seal wear.
- Volume per minute at 100% loading = 3.75 Ft.^{3}/ Min.
  Volume per minute at 30% loading = 1.1 Ft.^{3}/ Min.
- Not intended for severe duty. Designed for dust only. (Wood and other non-explosive dusts.)
- 8” dia. inlet. Reducers and adapters available.
- Unit weighs only 72 lbs. and ships via UPS.
- Assembles in minutes.

Part #	Description	Price
SAZ080000A	Rotary Air Lock	$ 2384.00

Items Not Covered By Quote

1. Control System: Panels, wiring, system control, breaker or starters unless noted in this quotation.
2. Freight cost, custom fees, duty or loading of freight unless noted in this quotation.
3. Federal, state, municipal or other government excise, sales, use occupational or other like taxes now in force or to be enacted unless noted in this quotation.
4. All labor required for installing the equipment.
5. Anything not specifically mentioned in this quotation.
6. Oneida Air Systems, Inc. reserves the right to void this quote in the event of a typing error or gross oversight.

WARRANTY 90 Days	WARRANTY 1 Year	WARRANTY 2 Years	WARRANTY 5 Years
Dust Deputy's Bag Gripper Remote Control Electronic Items	V - Systems Dust Cobras Mini-Gorillas	Smart Portables Gorilla Portables Super Dust Gorillas Hi-Vac Systems Direct Drive Systems Pulley Drive Systems	Pro 1500 / 2000 Smart Pro Systems* (*2 Yr. Motor Warranty)

Terms and Conditions / Shipping

Oneida tries to ship orders out in a timely manner, however sometimes delays and back orders are inevitable. Oneida will not be held responsible or liable for these conditions or the way they may effect your production. Back orders will be shipped when they are available. When orders are shipped UPS, UPS will notify you by e-mail. If shipped by Common Carrier, you can arrange for the trucking company to notify you and make arrangements for delivery. Shipping method is determined by Oneida Air Systems and is dependent upon material to be shipped and destination. You are not charged until your order is shipped.

Checking in Order

Please look over the shipped order very carefully in the presence of the delivery person for damage or incomplete shipment before signing the delivery receipt. Please note any tears or irregularities in shipping packaging, however slight, on the shipping delivery receipt. This could be an indication of extensive concealed damage. The shipping company will not take responsibility if the damage is not noted on the delivery receipt. In the event of shipping damage, call OAS Customer Service immediately at 1.800.732.4065 so we can expedite replacements. Please check in all parts within 3 days from receiving order. Notify OAS immediately of any missing or incorrect parts. OAS does not accept any claims for damage or shortage after 3 days from date of delivery.

Limited Warranty

Oneida Air Systems™ warrants the products manufactured by Oneida Air Systems, for a period of 1 or more years depending on the product, to the original purchaser from the date of purchase unless otherwise specified. Items not manufactured by Oneida Air Systems are limited to their own manufacturer's warranties. All electrical items such as magnetic starters, remotes, sensors, pumps and accessories are limited to 90 days. Oneida Air Systems warrantees that the product will be free from defects in materials and workmanship. This warranty does not apply to defects due directly or indirectly to misuse, negligence, accidents, abuse, repairs, alterations, improper wiring or lack of maintenance. This is Oneida Air Systems sole written warranty and any and all warranties that may be implied by law, including any merchantability or fitness, for any particular purpose, are hereby limited to the duration of this written warranty. Oneida Air Systems does not warrant or represent that the merchandise complies with the provisions of any law or acts unless the manufacturer so warrants. In no event shall Oneida Air Systems' liability under this warranty exceed the purchase price paid for the product and any legal actions brought against Oneida Air Systems shall be tried in the State of New York, County of Onondaga.

ONEIDA AIR SYSTEMS SHALL IN NO EVENT BE LIABLE FOR DEATH, INJURIES TO PERSONS OR PROPERTY OR FOR INCIDENTAL, AND CONTINGENT, SPECIAL, OR CONSEQUENTIAL DAMAGES ARISING FROM THE USE OF OUR PRODUCT.

Safety Warning - Please Read

Before Purchasing or Installing a dust collection system the buyer is cautioned to do so in accordance with prescribed Federal, State, Local, OSHA, NFPA, and any other applicable codes or regulations relating to the type of dust(s) you are collecting.

SOME TYPES OF DUST UNDER CERTAIN CONDITIONS HAVE THE POTENTIAL TO BE EXPLOSIVE.

Oneida Air Systems is not responsible for how the dust collector is used or installed. Dusts with deflagration or explosion risks, such as wood dust, may require additional safety equipment including but not limited to; venting, spark detection, suppression systems, back draft dampers or may require installation in an outside location or in a protected area away from personnel. The customer assumes the responsibility for contacting their insurance underwriter with regard to specific engineering controls or application requirements. (We suggest you reference NFPA 664, 654 and 68 codes for more information) Oneida Air Dust Collection Systems may not be suitable for some applications and are not designed to be used in explosive atmospheres. ***Oneida Air Systems equipment should only be installed and wired by a licensed electrician following all applicable local and national electrical codes.***

Some dust created by power sanding, sawing, grinding, drilling, and other construction activities contains chemicals known to cause cancer, birth defects or other reproductive harm. Some examples of these chemicals are:

- Lead from lead-based paints.
- Crystalline silica from bricks, cement and other masonry products.
- Arsenic and chromium from chemically-treated lumber.

Your risk from these exposures varies, depending on how often you do this type of work. To reduce your exposure to these chemicals, work in a well ventilated area, and work with approved safety equipment, such as those dust masks that are specially designed to filter out microscopic particles. Oneida Air Systems recommends using additional approved safety equipment such as an approved OSHA and NIOSH dust mask or respirator.

Oneida Air Systems makes every effort to accurately represent our products, specifications and prices; however Oneida Air Systems reserves the right to make changes to products and prices at any time. As a manufacturer, Oneida Air Systems reserves the right to change product designs and specifications at any time.

Delivery Risk of Loss

Products will be shipped to Buyer's single destination. Title and risk of loss shall pass to the Buyer upon delivery to such destination. Buyer pays transportation expenses. Dates of shipment are advisory and Oneida Air Systems will make reasonable efforts to ship on or before the date states for shipment, however, Oneida Air Systems shall not incur any liability for failure to ship on that date.

Returned Goods Policy

Buyer must inform Oneida Air Systems of any shortage or damage, by so noting in writing, on the freight delivery bill prior to signing to indicate receipt of shipment. All claims covered under the limited warranty, are subject to inspection and investigation by Oneida Air Systems. Oneida Air Systems reserves the right to inspect and investigate all returned products before Buyer's claim is settled. All products returned for a refund must be unused and resalable and purchased within the last 30 days. There are no refunds on flex hose or custom made components. There will be a 25% restocking fee applied to any returned items. Buyer must call and obtain a Return Material Authorization Number (RMA #) prior to making a return. All merchandise must be shipped to us prepaid.