Even a little Gorilla is still a Gorilla!

Oneida Air Systems

Mini GORILLA™

INDUSTRIAL

6_16

Portable ▪ Powerful ▪ Perfect

Applications

- Ideal for fine sanding dust.

- Perfect for the small shop. Move the collector to your machine.
- Lathe and wood turning applications.
- One machine at a time.

Made in the USA!

Mini-Gorilla™ Mobile Dust Collector Quote Sheet

1.800.732.4065

www.oneida-air.com

Oneida Air Systems, Inc. was founded in 1993 to bring cost effective, state-of-the-art dust collection systems and material handling ductwork to woodworking shops. OAS designs and manufactures industrial grade dust collection systems that create a practical, safe and healthy work place environment.

© 2011

The Oneida Advantage

Made in the USA!

Cyclonic... Mobile... Affordable

A Portable Dust Collector with virtually no suction loss!

- True High Efficiency Cyclone with Ultra-Fine Separation. Reduces Filter Clogging! Separates 99% of the Fine Dust.
- Industrial Quality - Heavy Duty Static Conductive Resin Construction. Built to Last a Lifetime. U.S.A. Made.
- Filter Media Captures 99.9% of Fine Dust.
- Easy to Clean Filter without Removal.
- Mobile.
- 22 Gal. Dust Drum w/ Locking Lid with 3 Casters.
- Patented Flame Guard™ HEPA Filter.
- Dust Level Viewing Window.
- Liner Bag Retainer Mechanism.
- Easy to Dispose of Liner Bags.

System and Options.

1.5hp Industrial Integral Fan Blower Industrial Quality Motor	▸ Premium 1.5hp Motor w/ Grease Fittings ▸ TEFC Motor, 1.15 Service Factor ▸ Insulation Class F ▸ Voltage: 1 Phase, 110 / 230V ▸ Amperage: 1 Phase, 16 / 8A ▸ Composite / Backward Inclined / Non-Sparking, Non-Ferrous as Required by NFPA Fire Code
System Performance	▸ Up to 600 cfm
System Dimensions	▸ Inlet Diameter: 5" w/ Neutral Vane ▸ Industrial strength static conductive resin ▸ Height of Cyclone & Motor - 64"x 36"x 30"
Filter Media	▸ GE Certified (H-12) HEPA Media / MERV 16+ Rated - see spec sheet on website - 35 Sq. Ft. of Media
Included	▸ 22 Gal. Drum with Locking Lid , and Dust Level Window
Accessories	▸ Flex Hose Kits ▸ Reducers & Machine Adapters

*Oneida reserves the right to change or modify specs and system appearance without notice. Actual system appearance may vary.

See Mini-Gorilla™ options on next page.

Oneida Mini-Gorilla™

Part #	Description	Price
XXPM010100H	1.5hp Industrial Mini-Gorilla™	$1,049.00
XXPM010100H220	1.5hp 220V Mini-Gorilla™	$1,099.00

This proposal may be withdrawn by Oneida Air Systems if not accepted within 30 days.

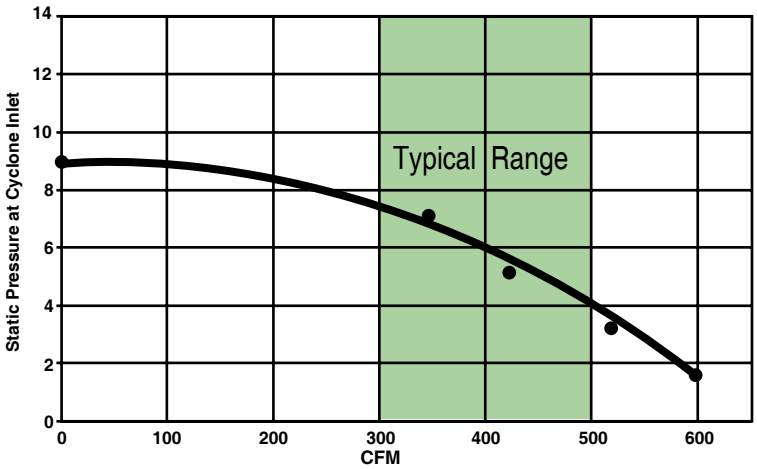

Comparison Between Oneida Mini-Gorilla™ & Single Stage Collectors

Category	Oneida Mini-Gorilla™	Single Stage Collector
Cyclone	Micro-Separation	No
Filter Maintenance	Minimal	Constant. No Pre-Separator. All Material Goes to the Filter.
USA Made	Yes	No
Quality	Built to Last A Lifetime.	No
Fan Curve	Actual Working CFM: Up to 583 CFM	Often Free Fan Numbers. Actual Working CFM almost Half of Max. CFM. ***See Chart.***
Motor Volts - Controls	Industrial 110v/220V Grease Fittings.	Imported 115 or 220v, Check Model
Cord w/ Plug	Yes	Check Model
Filtration	Independent Lab Tested Filter Media Captures 99.9% of Test Material Between 0.2 - 2 Microns @ 11 FPM with Flame Guard™ Protection.	2 Micron
Filter Cleaning	Easy cleaning without filter removal.	Messy Dust Bag or Hard to Clean Filter with Close Pleat Spacing and Wire Mesh Covering.
Dust Container	Lightweight 22 Gal. Drum & Lid w/ Locking Clamps. Dust level window. Uses easy to dispose of liner bags.	Plastic Bags. Risk of Breakage and Blown Off Bags.
Dimensions	Approx. 64" x 36" x 30"	Approx. 37" x 20' x 71"
Weight	85 lbs.	105 - 120 lbs.

Oneida Mini-Gorilla™

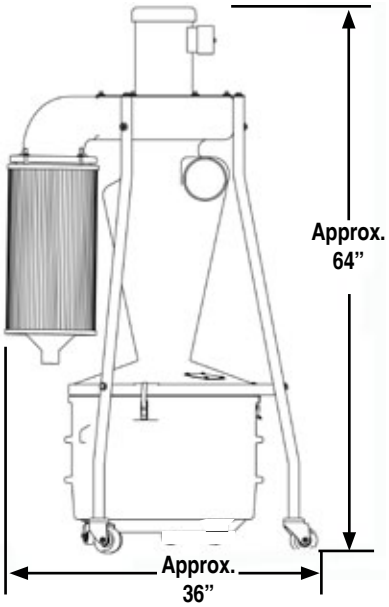

Single Stage Collector

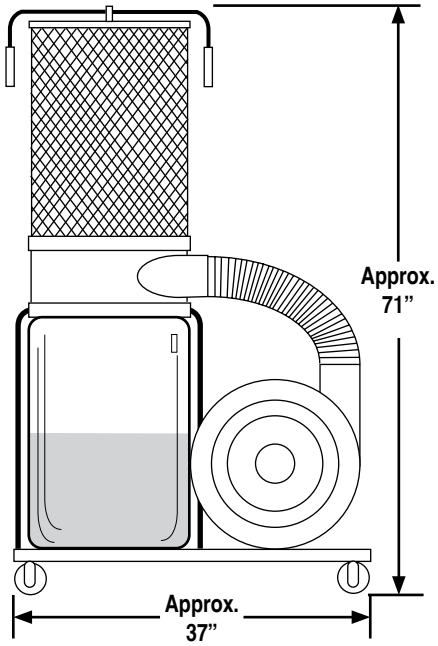

Note: CFM Numbers at 6,000 FPM indicate the maximum volume of air that can be moved through a specific pipe diameter.

Duct Diameter in Inches	Velocity @ 3000 FPM	Velocity @ 3500 FPM	Velocity @4000 FPM	Velocity @4500 FPM	Velocity @5000 FPM	Velocity @5500 FPM	Velocity @6000 FPM
4	262 CFM	306 CFM	349 CFM	393 CFM	437 CFM	489 CFM	524 CFM
5	409	477	546	614	682	764	818
6	589	687	786	884	982	1,100	1,178

*Velocity - Speed of Air in Ductwork (Feet Per Minute).
** CFM - Volume of Air in Duct at a Given Velocity (Cubic Feet Per Minute).
- Taken from: **Industrial Ventilation 25th Edition / American Conf. of Govt. Industrial Hygenists**

Accessories

35 Sq. Ft. of Filter Media

Drum Liner Bags

Part #	Description	Price
VAB363602	22 gal. Heavy Duty Plastic Bags	$0.85 each

Replacement Filters

Part #	Description	Price
FCS101935HF	10.5" x 19.5" HEPA Media Filter w/ Flame Guard™ protection.	$200.00

Features of this product may be covered by one or more of the following patents and trademarks:
#8377160 B2
#8393050 B2
#7824457 B2
#8377160 B2
#8496719 B2

Items Not Covered By Quote

1. Control System: Panels, wiring, system control, breaker or starters unless noted in this quotation.
2. Freight cost, custom fees, duty or loading of freight unless noted in this quotation.
3. Federal, state, municipal or other government excise, sales, use occupational or other like taxes now in force or to be enacted unless noted in this quotation.
4. All labor required for installing the equipment.
5. Anything not specifically mentioned in this quotation.
6. Oneida Air Systems, Inc. reserves the right to void this quote in the event of a typing error or gross oversight.

WARRANTY 90 Days	WARRANTY 1 Year	WARRANTY 2 Years	WARRANTY 5 Years
Dust Deputy's Bag Gripper Remote Control Electronic Items	V - Systems Dust Cobras Mini-Gorillas	Smart Portables Gorilla Portables Super Dust Gorillas Hi-Vac Systems Direct Drive Systems Pulley Drive Systems	Pro 1500 / 2000 Smart Pro Systems* (*2 Yr. Motor Warranty)

Terms and Conditions / Shipping

Oneida tries to ship orders out in a timely manner, however sometimes delays and back orders are inevitable. Oneida will not be held responsible or liable for these conditions or the way they may effect your production. Back orders will be shipped when they are available. When orders are shipped UPS, UPS will notify you by e-mail. If shipped by Common Carrier, you can arrange for the trucking company to notify you and make arrangements for delivery. Shipping method is determined by Oneida Air Systems and is dependent upon material to be shipped and destination. You are not charged until your order is shipped.

Checking in Order

Please look over the shipped order very carefully in the presence of the delivery person for damage or incomplete shipment before signing the delivery receipt. Please note any tears or irregularities in shipping packaging, however slight, on the shipping delivery receipt. This could be an indication of extensive concealed damage. The shipping company will not take responsibility if the damage is not noted on the delivery receipt. In the event of shipping damage, call OAS Customer Service immediately at 1.800.732.4065 so we can expedite replacements. Please check in all parts within 3 days from receiving order. Notify OAS immediately of any missing or incorrect parts. OAS does not accept any claims for damage or shortage after 3 days from date of delivery.

Limited Warranty

Oneida Air Systems™ warrants the products manufactured by Oneida Air Systems, for a period of 1 or more years depending on the product, to the original purchaser from the date of purchase unless otherwise specified. Items not manufactured by Oneida Air Systems are limited to their own manufacturer's warranties. All electrical items such as magnetic starters, remotes, sensors, pumps and accessories are limited to 90 days. Oneida Air Systems warrantees that the product will be free from defects in materials and workmanship. This warranty does not apply to defects due directly or indirectly to misuse, negligence, accidents, abuse, repairs, alterations, improper wiring or lack of maintenance. This is Oneida Air Systems sole written warranty and any and all warranties that may be implied by law, including any merchantability or fitness, for any particular purpose, are hereby limited to the duration of this written warranty. Oneida Air Systems does not warrant or represent that the merchandise complies with the provisions of any law or acts unless the manufacturer so warrants. In no event shall Oneida Air Systems' liability under this warranty exceed the purchase price paid for the product and any legal actions brought against Oneida Air Systems shall be tried in the State of New York, County of Onondaga.

ONEIDA AIR SYSTEMS SHALL IN NO EVENT BE LIABLE FOR DEATH, INJURIES TO PERSONS OR PROPERTY OR FOR INCIDENTAL, AND CONTINGENT, SPECIAL, OR CONSEQUENTIAL DAMAGES ARISING FROM THE USE OF OUR PRODUCT.

Safety Warning - Please Read

Before Purchasing or Installing a dust collection system the buyer is cautioned to do so in accordance with prescribed Federal, State, Local, OSHA, NFPA, and any other applicable codes or regulations relating to the type of dust(s) you are collecting.

SOME TYPES OF DUST UNDER CERTAIN CONDITIONS HAVE THE POTENTIAL TO BE EXPLOSIVE.

Oneida Air Systems is not responsible for how the dust collector is used or installed. Dusts with deflagration or explosion risks, such as wood dust, may require additional safety equipment including but not limited to; venting, spark detection, suppression systems, back draft dampers or may require installation in an outside location or in a protected area away from personnel. The customer assumes the responsibility for contacting their insurance underwriter with regard to specific engineering controls or application requirements. (We suggest you reference NFPA 664, 654 and 68 codes for more information) Oneida Air Dust Collection Systems may not be suitable for some applications and are not designed to be used in explosive atmospheres. ***Oneida Air Systems equipment should only be installed and wired by a licensed electrician following all applicable local and national electrical codes.***

Some dust created by power sanding, sawing, grinding, drilling, and other construction activities contains chemicals known to cause cancer, birth defects or other reproductive harm. Some examples of these chemicals are:

- Lead from lead-based paints.
- Crystalline silica from bricks, cement and other masonry products.
- Arsenic and chromium from chemically-treated lumber.

Your risk from these exposures varies, depending on how often you do this type of work. To reduce your exposure to these chemicals, work in a well ventilated area, and work with approved safety equipment, such as those dust masks that are specially designed to filter out microscopic particles. Oneida Air Systems recommends using additional approved safety equipment such as an approved OSHA and NIOSH dust mask or respirator.

Oneida Air Systems makes every effort to accurately represent our products, specifications and prices; however Oneida Air Systems reserves the right to make changes to products and prices at any time. As a manufacturer, Oneida Air Systems reserves the right to change product designs and specifications at any time.

Delivery Risk of Loss

Products will be shipped to Buyer's single destination. Title and risk of loss shall pass to the Buyer upon delivery to such destination. Buyer pays transportation expenses. Dates of shipment are advisory and Oneida Air Systems will make reasonable efforts to ship on or before the date states for shipment, however, Oneida Air Systems shall not incur any liability for failure to ship on that date.

Returned Goods Policy

Buyer must inform Oneida Air Systems of any shortage or damage, by so noting in writing, on the freight delivery bill prior to signing to indicate receipt of shipment. All claims covered under the limited warranty, are subject to inspection and investigation by Oneida Air Systems. Oneida Air Systems reserves the right to inspect and investigate all returned products before Buyer's claim is settled. All products returned for a refund must be unused and resalable and purchased within the last 30 days. There are no refunds on flex hose or custom made components. There will be a 25% restocking fee applied to any returned items. Buyer must call and obtain a Return Material Authorization Number (RMA #) prior to making a return. All merchandise must be shipped to us prepaid.